Cambridge International AS & A Level

Cambridge Assessment International Education
Cambridge International Advanced Subsidiary and Advanced Level

COMPUTER SCIENCE **9608/12**

Paper 1 Written Paper **May/June 2018**

MARK SCHEME

Maximum Mark: 75

Published

This mark scheme is published as an aid to teachers and candidates, to indicate the requirements of the examination. It shows the basis on which Examiners were instructed to award marks. It does not indicate the details of the discussions that took place at an Examiners' meeting before marking began, which would have considered the acceptability of alternative answers.

Mark schemes should be read in conjunction with the question paper and the Principal Examiner Report for Teachers.

Cambridge International will not enter into discussions about these mark schemes.

Cambridge International is publishing the mark schemes for the May/June 2018 series for most Cambridge IGCSE™, Cambridge International A and AS Level and Cambridge Pre-U components, and some Cambridge O Level components.

IGCSE™ is a registered trademark.

This document consists of **9** printed pages.

© UCLES 2018

Cambridge Assessment International Education

Generic Marking Principles

These general marking principles must be applied by all examiners when marking candidate answers. They should be applied alongside the specific content of the mark scheme or generic level descriptors for a question. Each question paper and mark scheme will also comply with these marking principles.

GENERIC MARKING PRINCIPLE 1: Marks must be awarded in line with: the specific content of the mark scheme or the generic level descriptors for the question the specific skills defined in the mark scheme or in the generic level descriptors for the question the standard of response required by a candidate as exemplified by the standardisation scripts.
GENERIC MARKING PRINCIPLE 2: Marks awarded are always **whole marks** (not half marks, or other fractions).
GENERIC MARKING PRINCIPLE 3: Marks must be awarded **positively**: marks are awarded for correct/valid answers, as defined in the mark scheme. However, credit is given for valid answers which go beyond the scope of the syllabus and mark scheme, referring to your Team Leader as appropriate marks are awarded when candidates clearly demonstrate what they know and can do marks are not deducted for errors marks are not deducted for omissions answers should only be judged on the quality of spelling, punctuation and grammar when these features are specifically assessed by the question as indicated by the mark scheme. The meaning, however, should be unambiguous.
GENERIC MARKING PRINCIPLE 4: Rules must be applied consistently e.g. in situations where candidates have not followed instructions or in the application of generic level descriptors.
GENERIC MARKING PRINCIPLE 5: Marks should be awarded using the full range of marks defined in the mark scheme for the question (however; the use of the full mark range may be limited according to the quality of the candidate responses seen).
GENERIC MARKING PRINCIPLE 6: Marks awarded are based solely on the requirements as defined in the mark scheme. Marks should not be awarded with grade thresholds or grade descriptors in mind.

© UCLES 2018

<table>
<tr><th>Question</th><th>Answer</th><th>Marks</th></tr>
<tr><td>1(a)(i)</td><td>1 mark per bullet to max 3
Storage space divided into file allocation units
Space allocated to particular files
Maintains/creates directory structures
Specifies the logical method of file storage (e.g. FAT or NTFS)
Provides file naming conventions
Controls access // implements access rights // implements password protection // Makes file sharing possible
Specifies tasks that can be performed on a file (e.g. open, close, delete, copy, create, move etc.)</td><td>3</td></tr>
<tr><td>1(a)(ii)</td><td>1 mark per bullet to max 3
Installs printer driver
Sends data to the printer / buffer to print // sends documents to the print queue
Sends commands to printer
Receives and handles (error) messages/signals/interrupts from the printer</td><td>3</td></tr>
<tr><td>1(b)(i)</td><td>1 mark for each correct box ticked.
<table>
<tr><th>Program</th><th>True</th><th>False</th></tr>
<tr><td>Database</td><td></td><td>✓</td></tr>
<tr><td>Virus checker</td><td>✓</td><td></td></tr>
<tr><td>Web browser</td><td></td><td>✓</td></tr>
<tr><td>Backup software</td><td>✓</td><td></td></tr>
</table></td><td>4</td></tr>
<tr><td>1(b)(ii)</td><td>1 mark for each valid utility program to max 2
e.g.
System clean up
Automatic update
Disk contents analysis / Disk checking / Disk repair
File compression
Disk formatter
Firewall
Disk Defragmenter</td><td>2</td></tr>
</table>

Question	Answer	Marks
2(a)	**1 mark** for each gate with the correct inputs. Final two gates must also have the correct output. 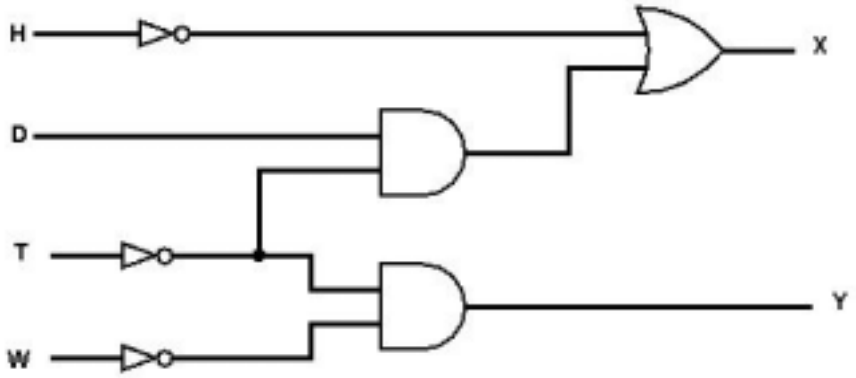 	6
2(b)	**One mark** for each pair of rows.	4

A	B	C	Working space	X
0	0	0		1
0	0	1		1
0	1	0		1
0	1	1		0
1	0	0		0
1	0	1		0
1	1	0		0
1	1	1		0

<table>
<tr><th>Question</th><th>Answer</th><th>Marks</th></tr>
<tr><td>3(a)</td><td>1 mark for correct parity bit

Parity bit
<table>
<tr><td>0</td><td>0</td><td>1</td><td>0</td><td>0</td><td>0</td><td>0</td><td>0</td></tr>
</table></td><td>1</td></tr>
<tr><td>3(b)</td><td>1 mark for the correct bit circled.
<table>
<tr><th></th><th>Parity bit</th><th colspan="7">Data</th></tr>
<tr><td></td><td>1</td><td>0</td><td>1</td><td>0</td><td>1</td><td>1</td><td>1</td><td>1</td></tr>
<tr><td></td><td>0</td><td>1</td><td>1</td><td>0</td><td>0</td><td>1</td><td>1</td><td>0</td></tr>
<tr><td></td><td>1</td><td>1</td><td>0</td><td>0</td><td>0</td><td>0</td><td>0</td><td>0</td></tr>
<tr><td></td><td>0</td><td>(1)</td><td>0</td><td>0</td><td>0</td><td>0</td><td>0</td><td>0</td></tr>
<tr><td>Parity byte</td><td>0</td><td>0</td><td>0</td><td>0</td><td>1</td><td>0</td><td>0</td><td>1</td></tr>
</table></td><td>1</td></tr>
<tr><td>3(c)</td><td>1 mark per each correct row
<table>
<tr><th>Measure</th><th>Validation</th><th>Verification</th></tr>
<tr><td>Checksum</td><td></td><td>✓</td></tr>
<tr><td>Format check</td><td>✓</td><td></td></tr>
<tr><td>Range check</td><td>✓</td><td></td></tr>
<tr><td>Double entry</td><td></td><td>✓</td></tr>
<tr><td>Check digit</td><td>✓</td><td></td></tr>
</table></td><td>5</td></tr>
</table>

Question	Answer	Marks
4(a)(i)	219	**1**
4(a)(ii)	DB	**1**
4(a)(iii)	−37	**1**
4(b)(i)	**1 mark** from: The <u>symbols</u> that the <u>computer</u> recognises/uses A list of <u>characters</u> recognised by the <u>computer</u> hardware and software	**1**

Question	Answer	Marks
4(b)(ii)	**1 mark** per bullet to **max 2** UNICODE has greater range of characters than ASCII UNICODE represents most written languages in the world while ASCII does not ASCII used for English only ASCII uses 7 or 8 bits or one byte whereas UNICODE uses up to 4 bytes per character UNICODE is standardised while ASCII is not	**2**
4(b)(iii)	**1 mark** for correct working, **1 mark** for correct answer Working: Code for Z = Code for A + 25_{10} Code for Z = 41_{16} +25_{10} Code for Z = 41_{16} + 19_{16} Code for Z = $5A_{16}$ Answer: $5A_{16}$	**2**

Question	Answer	Marks
5(a)	**1 mark** per bullet to **max 3** Amplitude (of the sound wave) measured At <u>set / regular</u> time intervals / per time unit / time period Value of the sample is recorded as a binary number	**3**
5(b)	**1 mark** per bullet to **max 2** (Increasing the sampling resolution means) more bits per sample // larger range of values Larger file size More accurate representation of sound	**2**
5(c)	**1 mark** per bullet to **max 3** Fewer samples (per unit time) File size will decrease Larger gaps / spaces between samples // Greater quantization errors Sound accuracy will reduce // not as close to original sound	**3**

© UCLES 2018

Question	Answer	Marks
5(d)	**1 mark** for naming feature/tool, **1 mark** for description. **Max 2** features e.g. Fading Change the volume of a section of the sound for it get louder/quieter Removing sound / elements Delete sections of the sound wave, for example, background noise Copy Repeat elements of the sound wave	**4**

Question	Answer	Marks

6(a)	**1 mark** each
	`mark`
	`grade`
		2

6(b)	`25`	**1**
6(c)	**1 mark** per bullet Takes the value entered in the text box / input field `'Mark'` Stores (it) in the variable `mark` // Assigns (it) to the variable `mark`	**2**
6(d)(i)	Client-side	**1**
6(d)(ii)	**1 mark** per bullet to **max 3** Client-side (script) is run on the computer making the request …when the (web page) data is received by the computer Server-side (script) is run on the web server The results are sent to the computer that made the request	**3**

Question	Answer	Marks

7(a)(i)	**1 mark** per bullet
	`UserName` is the primary key in `USER`
	`UserName` is (included as) a foreign key in `PHOTO`
		2

7(a)(ii)	**1 mark** for each correct relationship 	**2**

Question	Answer	Marks
7(b)	**1 mark** per bullet to **max 2** for explanation Referential integrity is making sure tables do not try to reference data which does not exist // A value of one attribute of a table exists as a value of another attribute in a different table A primary key cannot be deleted unless all dependent records are already deleted Cascading delete A primary key cannot be updated unless all dependent records are already updated Cascading update / edit Every foreign key value has a matching value in the corresponding primary key The foreign keys must be the same data type as the corresponding primary key **1 mark** for a suitable example e.g. A `UserName` cannot be deleted from the `USER` table if they have a related photo/textpost If `UserName` is updated in `USER` table, it must also be updated in `PHOTO` and `TEXTPOST` tables Cannot create/edit a record in `TEXTPOST` / `PHOTO` without a matching entry in `USER` table	**3**
7(c)	**Max 1 mark** from each bulleted group **1NF** No repeated groups of attributes All attributes should be atomic No duplicate rows **2NF** (in 1NF and) No partial dependencies **3NF** (in 2NF and) No non-key dependencies No transitive dependencies	**3**

7(d)(i)	**1 mark** per bullet
	`CREATE TABLE USER` and `();`
	`UserName`, `FirstName` and `SecondName` as `VARCHAR` and commas
	`DateOfBirth` as `DATE` and comma
	`PRIMARY KEY(UserName)`
	An appropriate `NOT NULL`
	
	`CREATE TABLE USER(`
	`  UserName: varchar(15) NOT NULL,`
	`  FirstName: varchar(25),`
	`  SecondName: varchar(25),`
	`  DateOfBirth: Date,`
	`  PRIMARY KEY(UserName)`
	`  );`
		5

Question	Answer	Marks

7(d)(ii)	**1 mark** per bullet
	`ALTER TABLE USER`
	`ADD COUNTRY varchar;`
	
	`ALTER TABLE USER`
	`ADD Country varchar;`
		2